ASSEMBLING INSTRUCTIONS
NAGOYA-MARRON

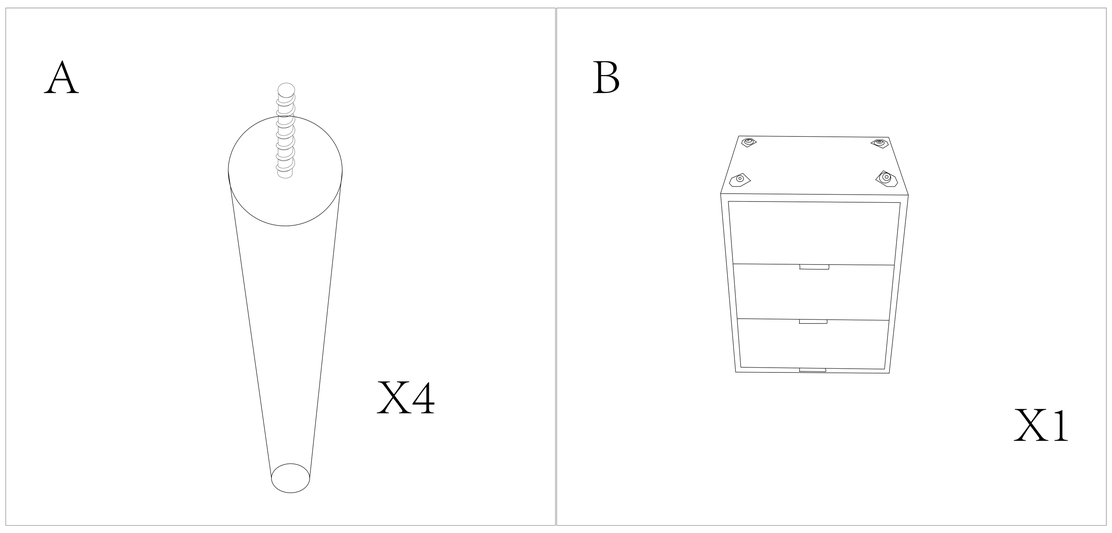

1

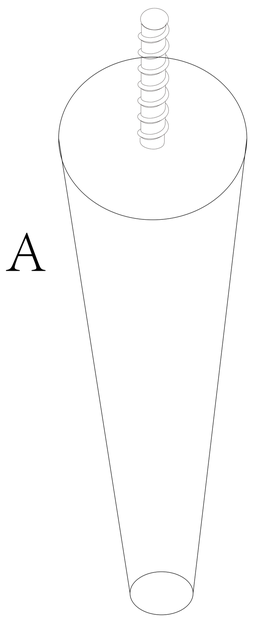

2

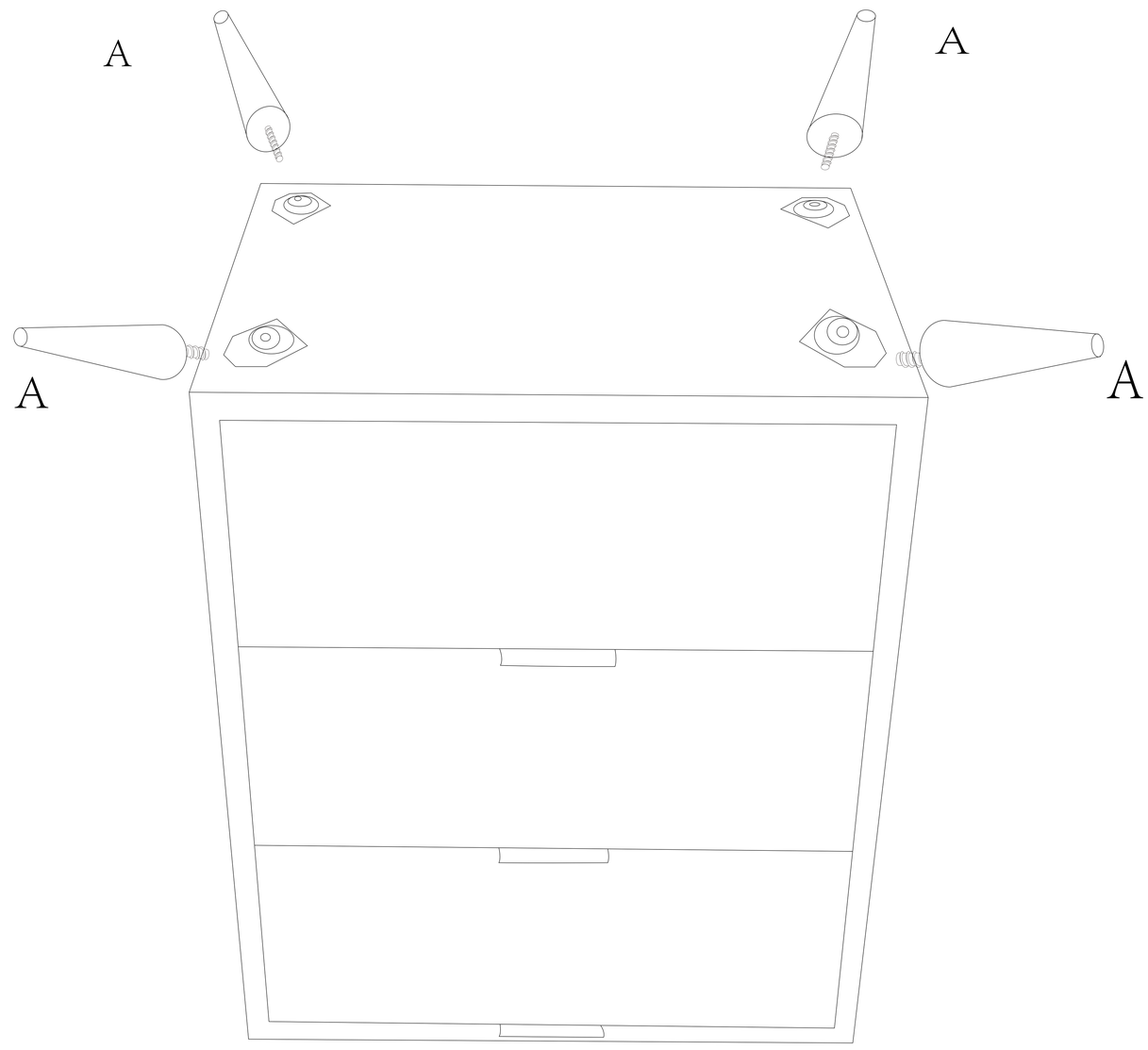
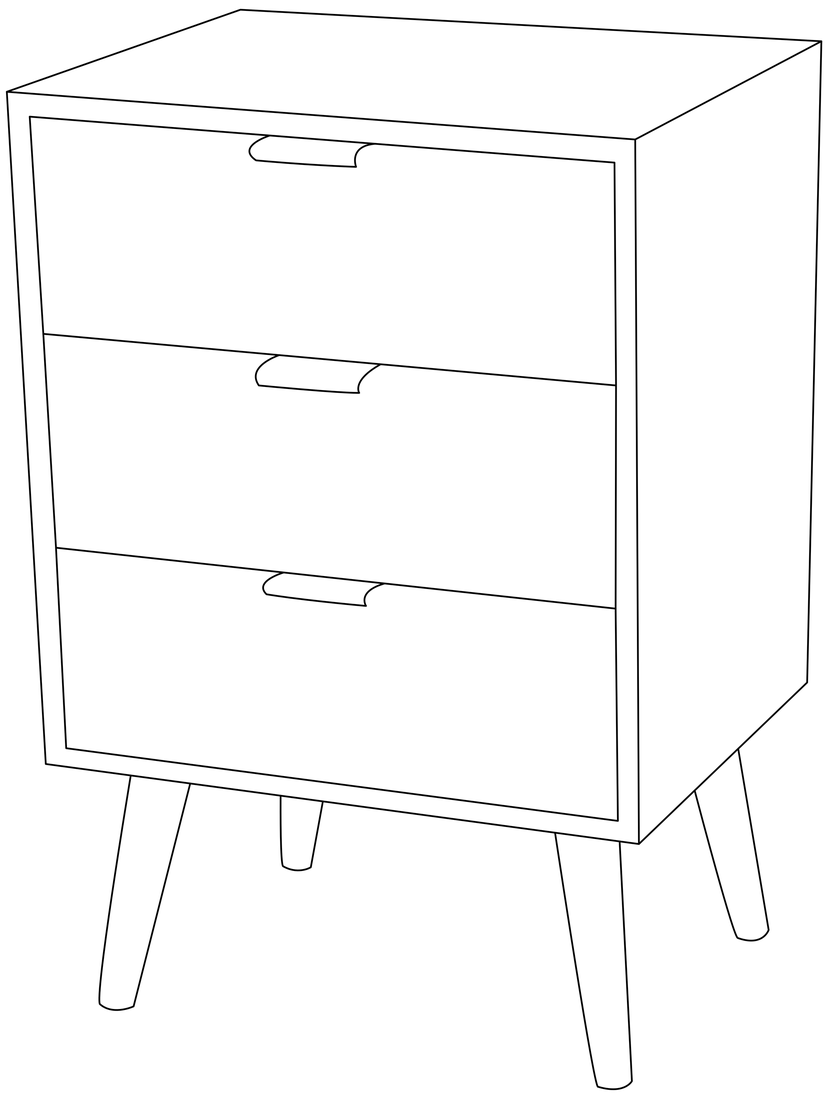
3